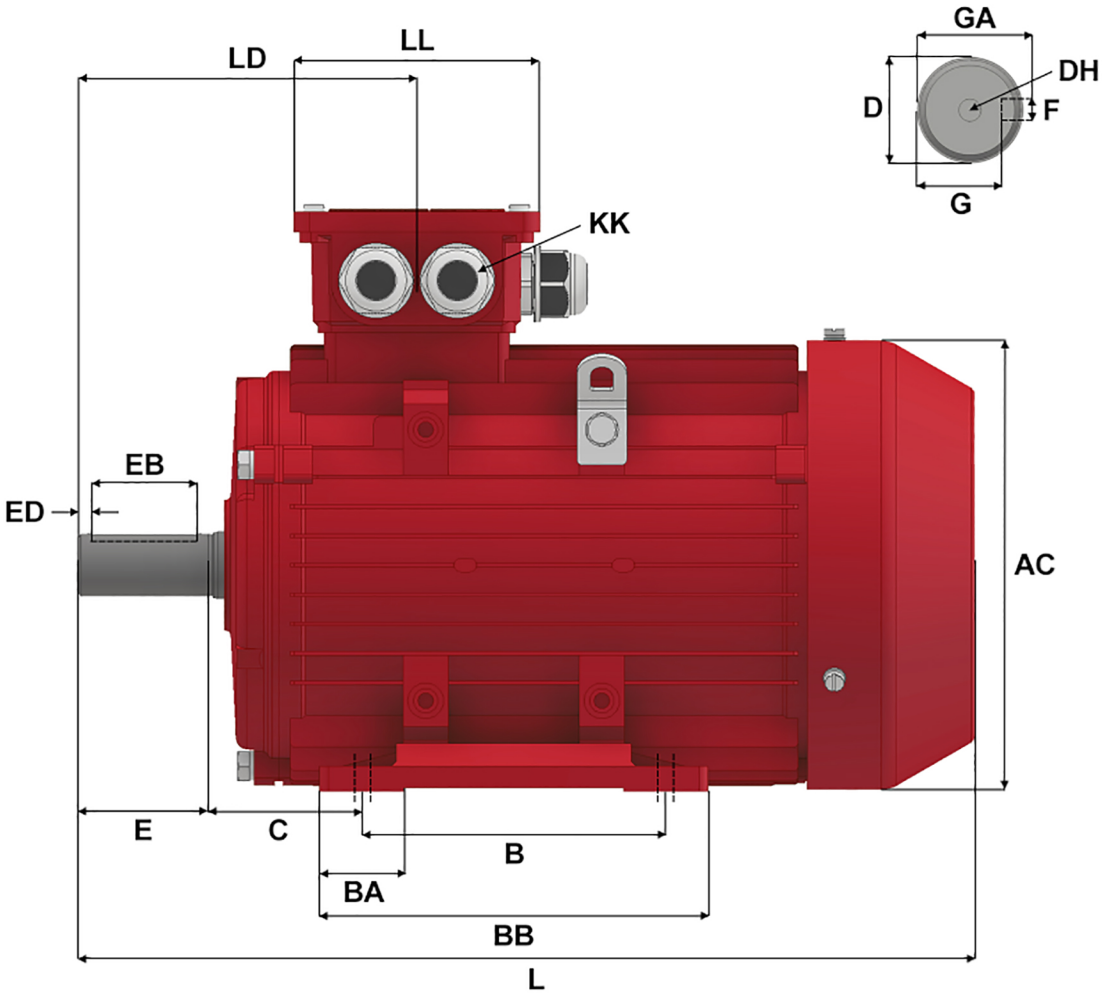

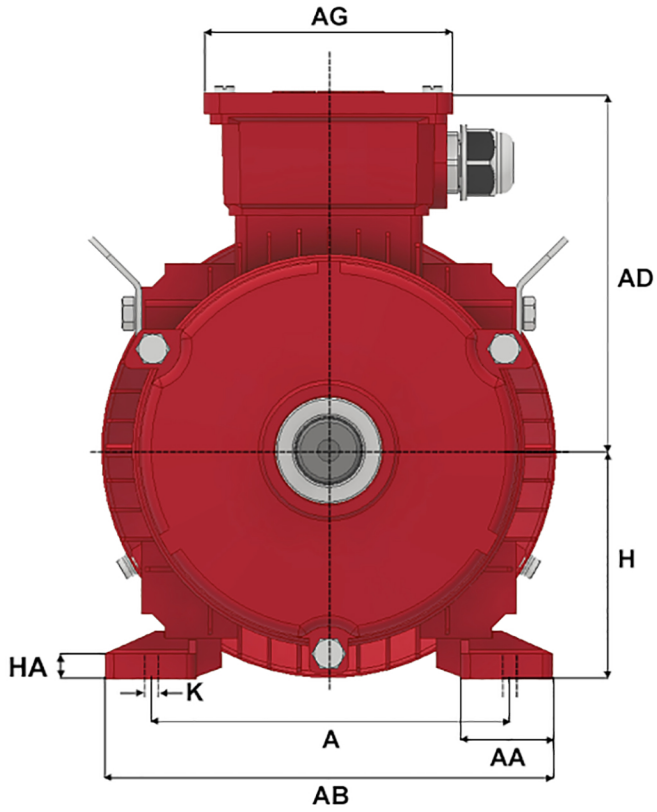

Version: 1JLEM			Revised: 09-11-2019			HP	RPM	FRAME	ENCLOSURE	IJA132M3-6-B3		
Customer is responsible in determining that Max Motion product will fit/perform suitably in the intended application						10	1165	132M	TEFC			
A	B	C	D	E	F	G	H	K	L	AA	AB	AC
216	178	89	38	80	10	33	132	12 X 16	485	51	262	258
AD	AG	BA	BB	DH	EB	ED	GA	HA	KK (1)	KK (2)	KK (3)	LD
188	117.5	46	224	M12 X 28	65	7.5	41	15	M32 X 1.5	3/4'' NPT	M16 X 1.5	180
LL												
117.5												